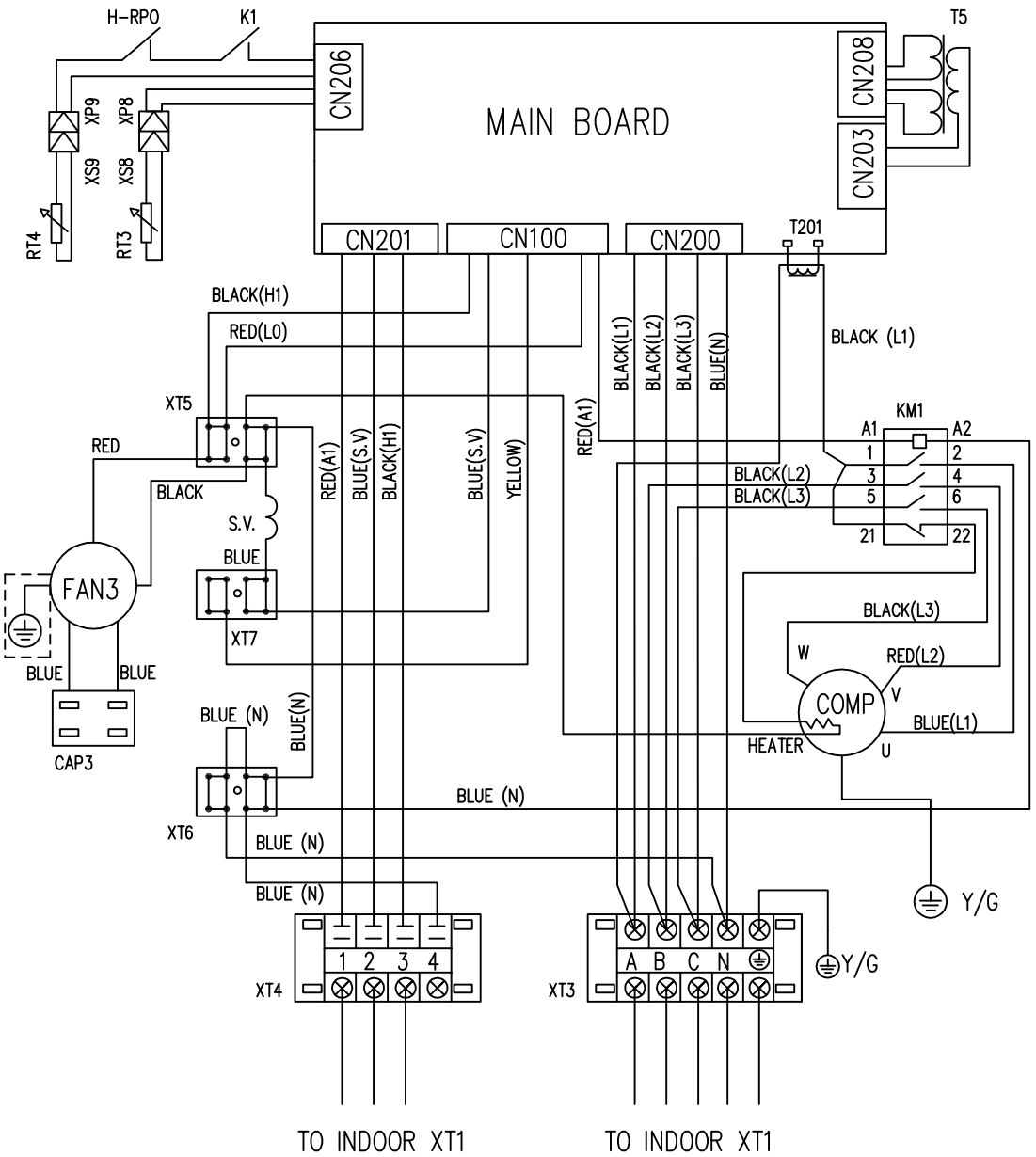

WIRING DIAGRAM (OUTDOOR UNIT)

CODE	PART NAME
COMP	COMPRESSOR
FAN3	OUTDOOR FAN
CAP3	FAN CAPACITOR
S.V.	4-WAY VALVE
KM1	AC CONTACTOR
HEATER	CRANK
XT4	4-WAY TERMINAL
XT5-7	CONNECTORS
H-PRO	HIGH PRESSURE SWITCH
RT3	PIPE TEMP. SENSOR
XS 8-9	CONNECTORS
XP 8-9	CONNECTORS
CN100-208	PCB SOCKETS
K1	TEMP PROTECT SWITCH
RT4	ROOM TEMPERATURE SENSOR
XT3	5-WAY TERMINAL
T5	TRANSFORMER
T201	CURRENT DETECTOR

AOU	Condensing unit
Model AOU-105HPS3	ELECTRICAL DRAWING
AlpicAir	20.08.2011